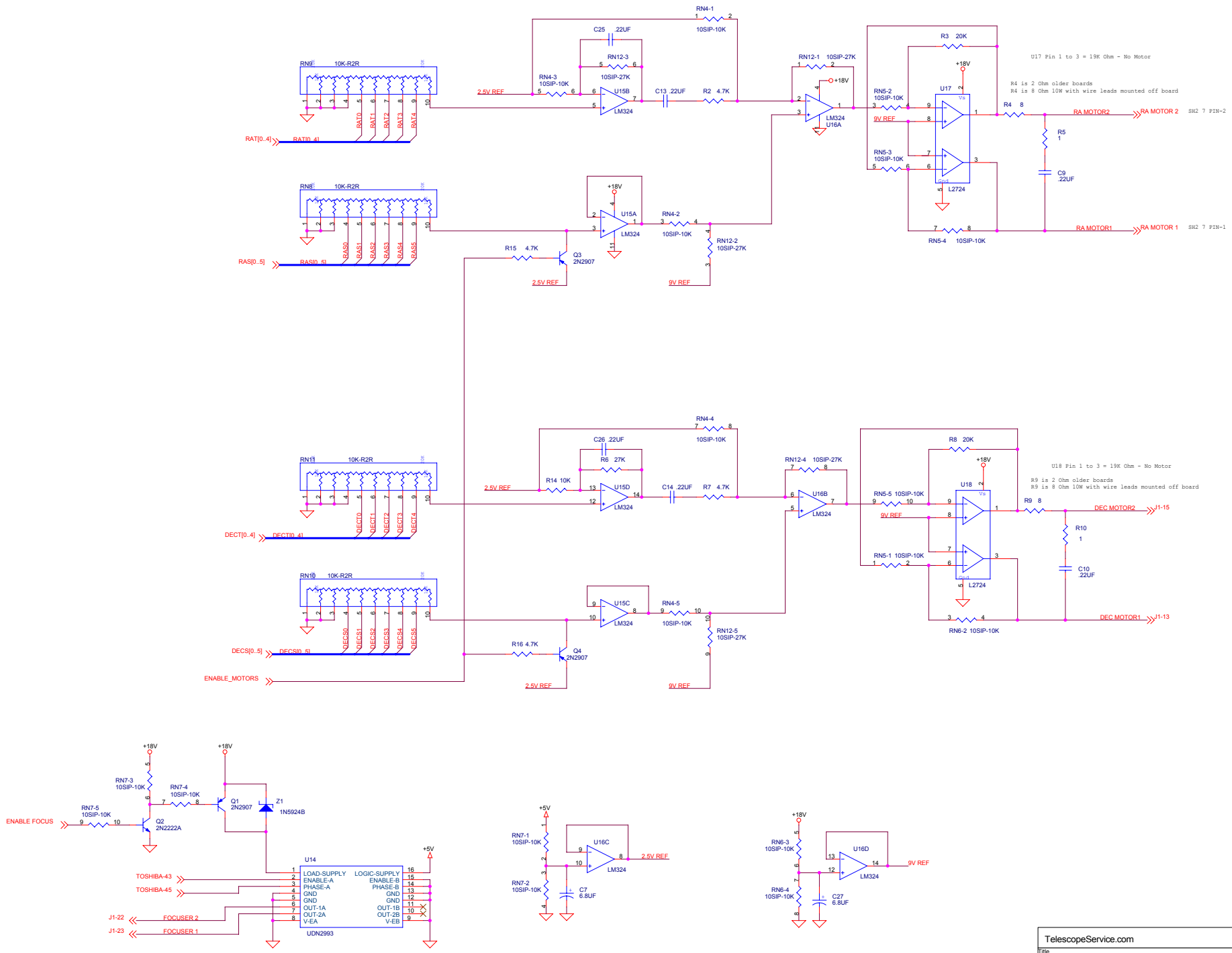

TelescopeService.com

Title: MEADE LX200 Classic - Main Board: Sheet 3

Size	Document Number	Rev
C	834-2001	C

Date: Saturday, January 15, 2005 Sheet 3 of 3